FUP450
Spare parts catalogue

Duun Industrier as
7630 Åsen, Norway
www.duun.no

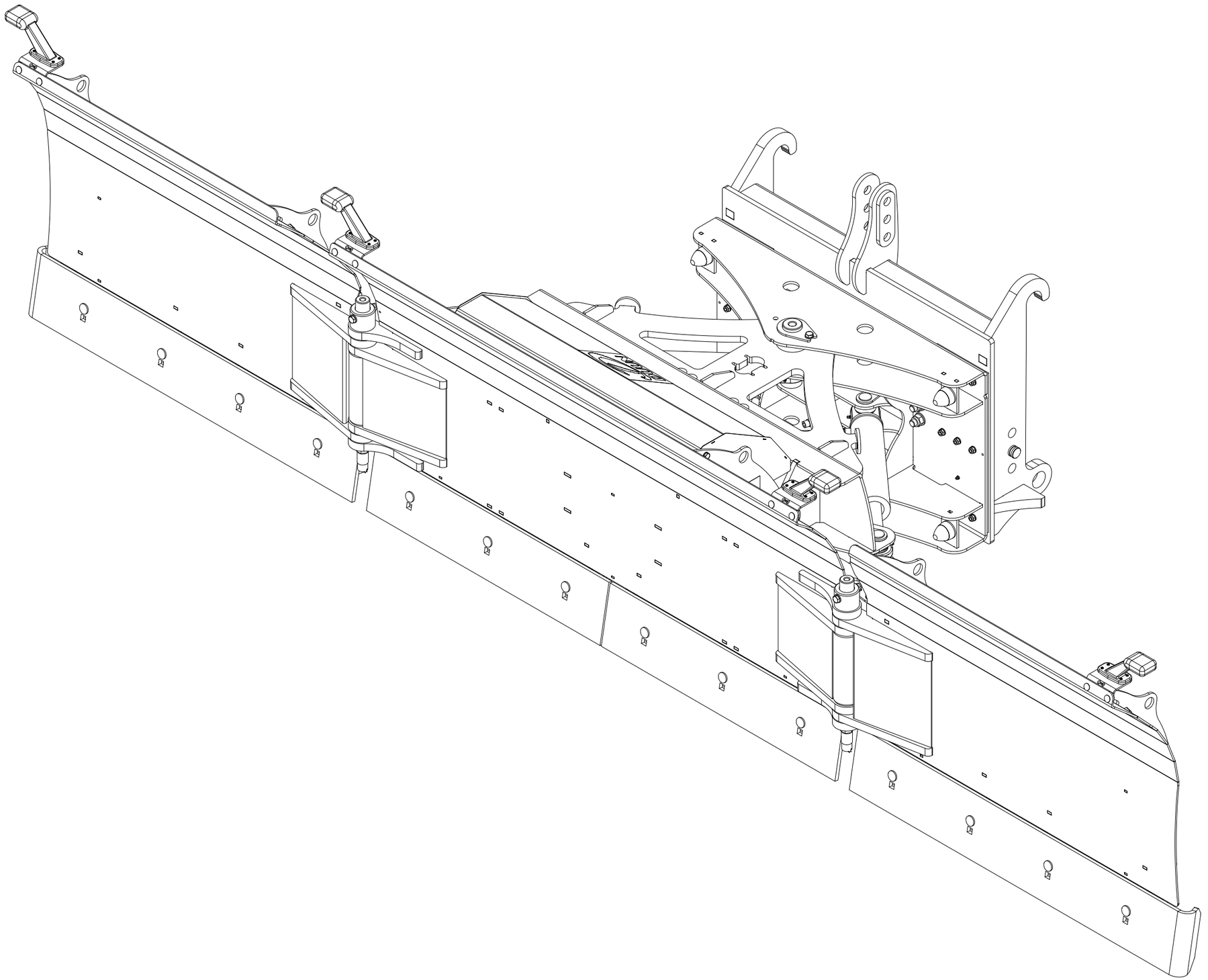

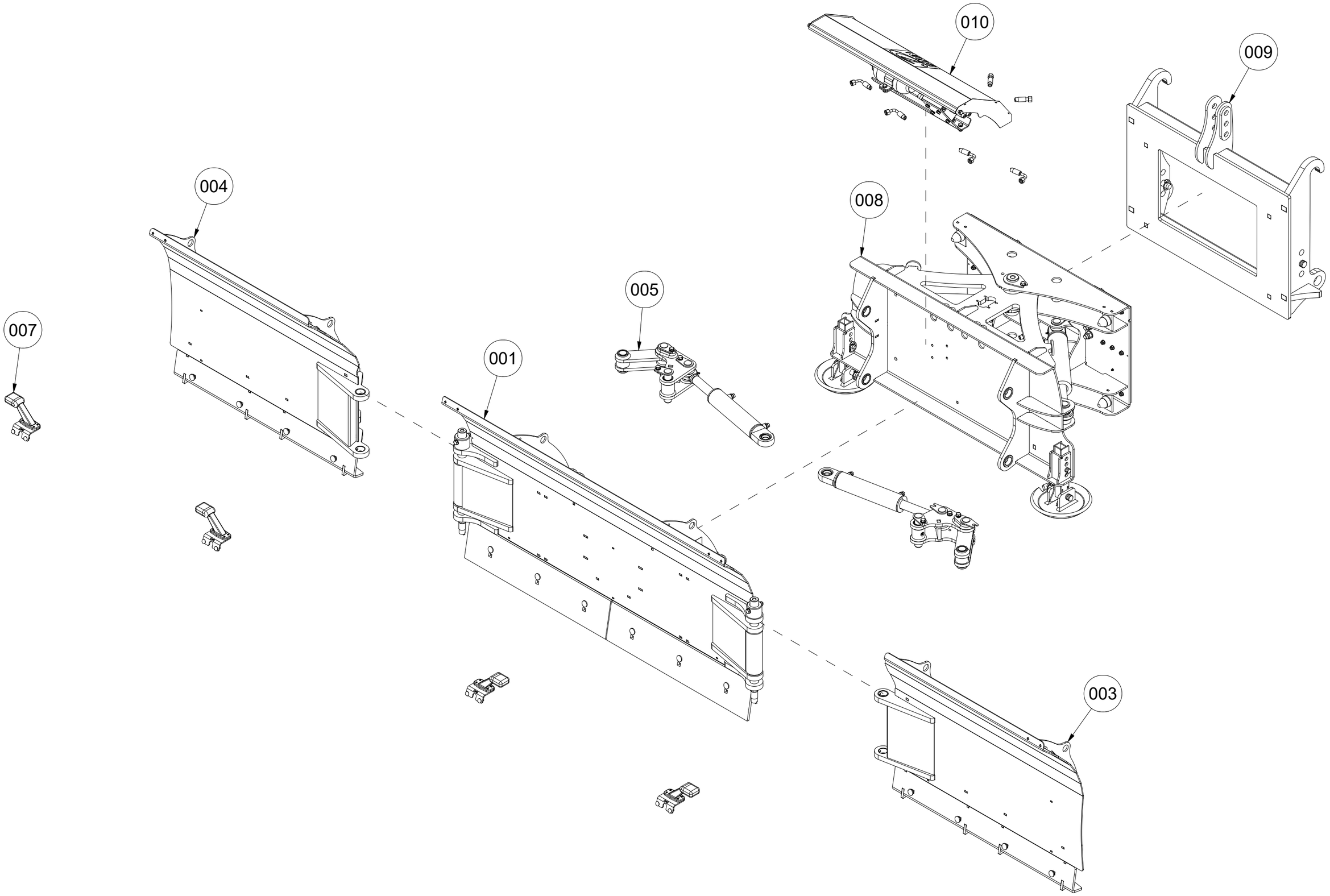
010
009
004
008
007
005
001
003

001 The main blade FUP450

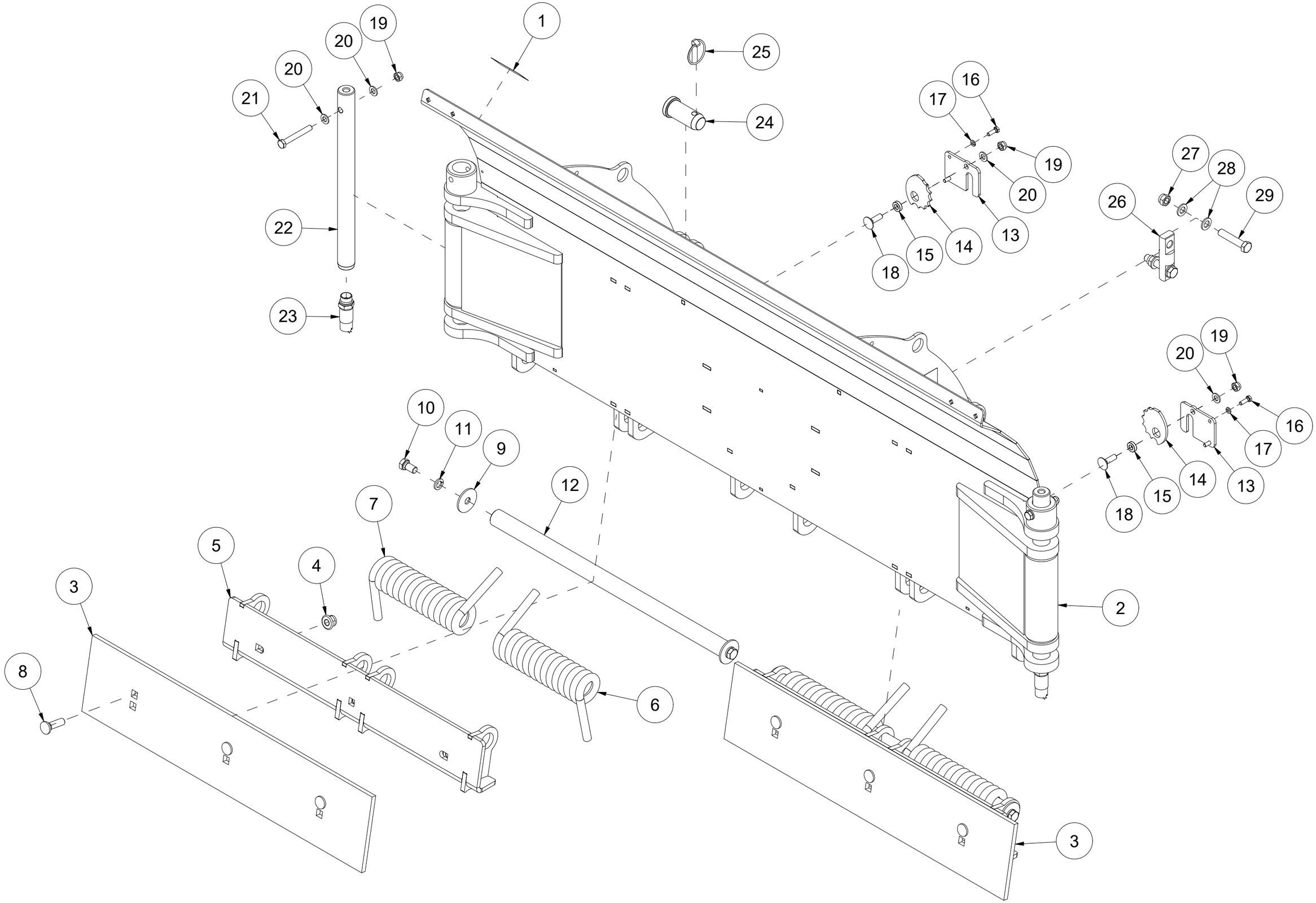

Pos	Qty	Article no	Designation
1	2	2935088	Adhesive label 90x48 Hand pinch hazard
2	1	24101010	The main blade L1896 v2
3	2	2112226	Flat wear steel 12x200x915
4	6	2489175	Locking nut with flange M16 ElZn DIN 6926
5	2	24101013	Give away plate of the main blade L830
6	2	24101065	Spring for shear trigger Ø19 L300 VV
7	2	24101066	Spring for shear trigger Ø19 L300 HV
8	6	2343494	Locking screw M16x55 St 12.9
9	4	23521053	Washer Ø17/60x4
10	4	2422485	Hexagon screw M16x30 ElZn 8.8 DIN 933
11	4	2534078	Spring washer M16 ElZn DIN 127
12	2	24101064	Shaft for spring releaser Ø40x738
13	4	24101027	Lid for spring tensioner
14	4	24101028	Spring tensioner
15	4	24101029	Sliding bearing Ø12/24x7
16	8	2422246	Hexagon screw M8x25 ElZn 8.8 DIN 933
17	8	2534047	Spring washer M8 ElZn DIN 127
18	4	2344352	Locking screw M12x40 ElZn 8.8 DIN 603
19	6	2483611	Locking nut M12 ElZn DIN 985
20	8	2531069	Washer M12 ElZn DIN 125
21	2	2422364	Hexagon screw M12x90 ElZn 8.8 DIN 931
22	2	24101069	Hinge bolt Ø40x498
23	2	24101070	Scraper L195
24	4	24101033	Fastening bolt Ø40x90
25	4	2556145	Linch pin Ø12x50
26	2	24101026	Cylinder attachment bolt
27	4	2483613	Locking nut M16 ElZn DIN 985
28	8	2531078	Washer M16 ElZn DIN 125
29	4	2422500	Hexagon screw M16x80 ElZn 8.8 DIN 931

003 Left side wing FUP450

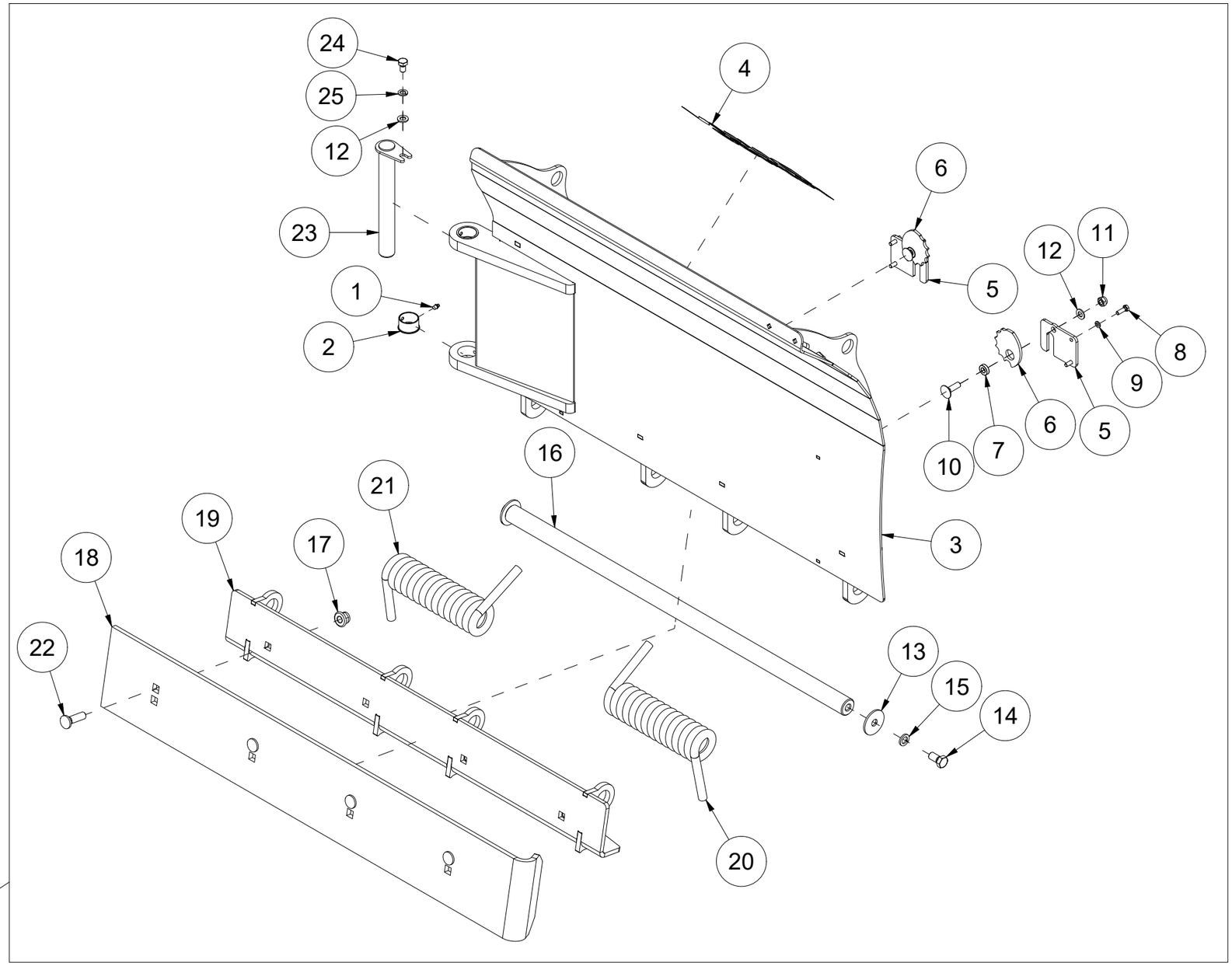

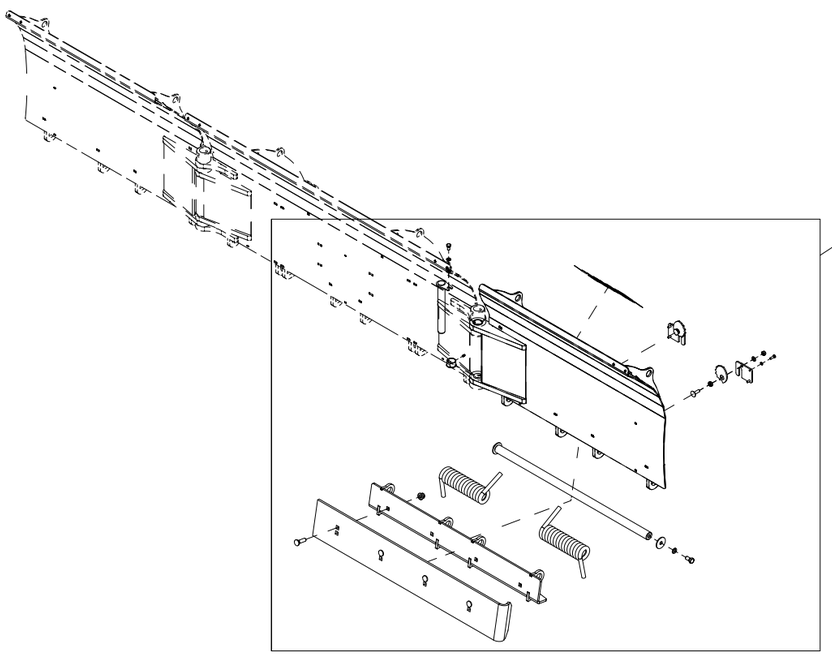

Pos	Qty	Article no	Designation
1	2	2478407	Grease nipple, Straight M8
2	2	2245252	Bushing SF1 Ø40-Ø44-25
3	1	24101011	Left side wing L1265 v2
4	1	2935210	Adhesive label FUP450 341x200
5	2	24101027	Lid for spring tensioner
6	2	24101028	Spring tensioner
7	2	24101029	Sliding bearing Ø12/24x7
8	4	2422246	Hexagon screw M8x25 ElZn 8.8 DIN 933
9	4	2534047	Spring washer M8 ElZn DIN 127
10	2	2344352	Lock screw M12x40 ElZn 8.8 DIN 603
11	2	2483611	Locking nut M12 ElZn DIN 985
12	3	2531069	Washer M12 ElZn DIN 125
13	2	23521053	Washer Ø17/60x4
14	2	2422485	Hexagon screw M16x30 ElZn 8.8 DIN 933
15	2	2534078	Spring washer M16 ElZn DIN 127
16	1	24101067	Shaft for spring releaser Ø40x1050
17	4	2489175	Locking nut with flange M16 ElZn DIN 6926
18	1	2112245	Wear steel 12x200x1280 End bend
19	1	24101014	Give away plate of the side wing L1166
20	1	24101065	Torsion spring Ø19 L300 VV
21	1	24101066	Torsion spring Ø19 L300 HV
22	4	2343494	Locking screw M16x55 St 12.9
23	1	24101054	Bolt Ø35x302
24	1	2422344	Hexagon screw M12x20 ElZn 8.8 DIN 933
25	1	2534069	Spring washer M12 ElZn DIN 127

004 Right side wing FUP450

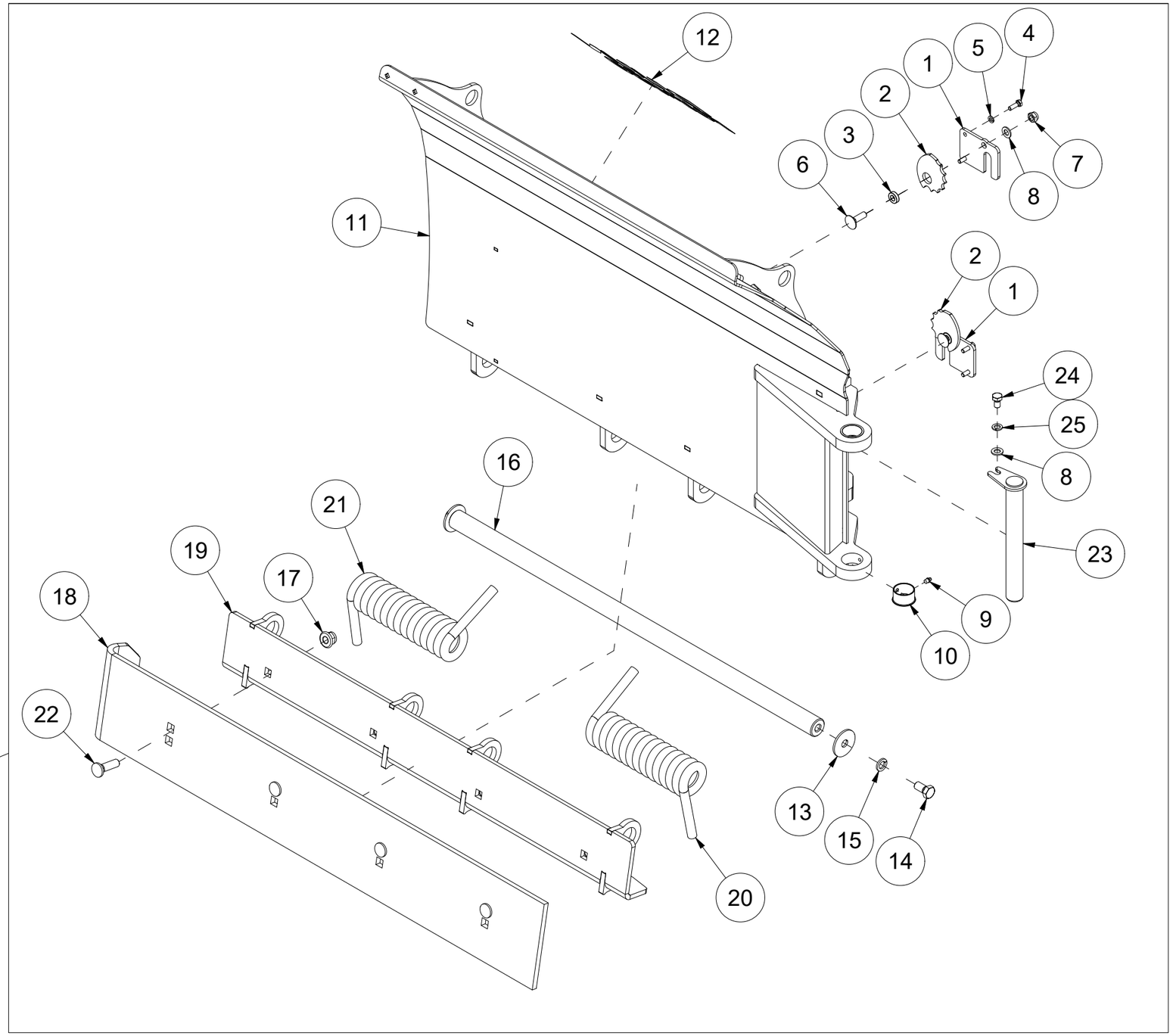

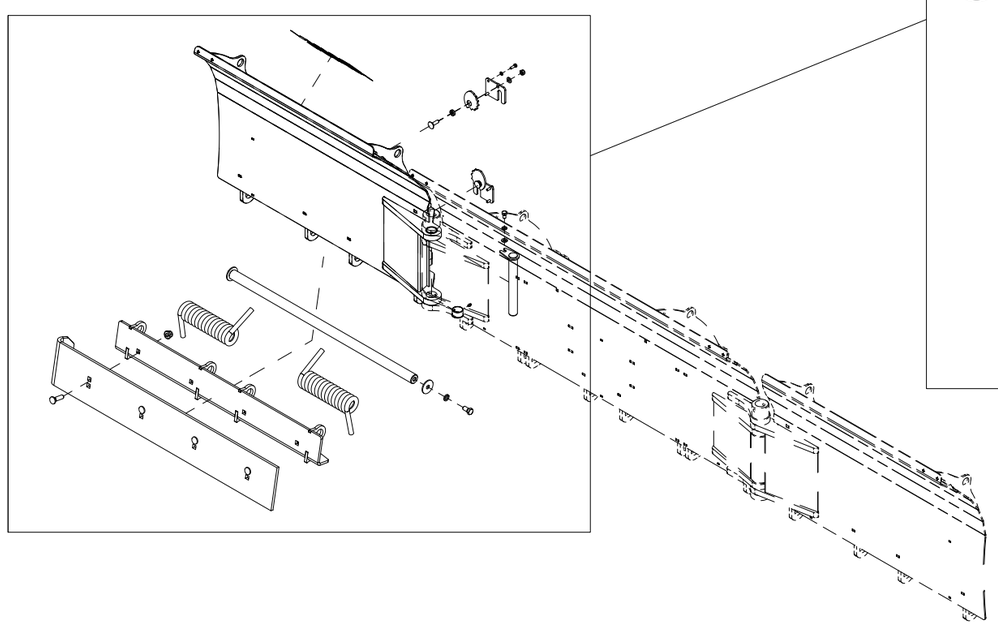

Pos	Qty	Article no	Designation
1	2	24101027	Lid of spring tensioner
2	2	24101028	Spring tensioner
3	2	24101029	Sliding bearing Ø12/24x7
4	4	2422246	Hexagon screw M8x25 ElZn 8.8 DIN 933
5	4	2534047	Spring washer M8 ElZn DIN 127
6	2	2344352	Locking screw M12x40 ElZn 8.8 DIN 603
7	2	2483611	Locking nut M12 ElZn DIN 985
8	3	2531069	Washer M12 ElZn DIN 125
9	2	2478407	Grease nipple, Straight M8
10	2	2245252	Bushing SF1 Ø40-Ø44-25
11	1	24101012	Right side wing L1265 v2
12	1	2935210	Adhesive label FUP450 341x200
13	2	23521053	Washer Ø17/60x4
14	2	2422485	Hexagon screw M16x30 ElZn 8.8 DIN 933
15	2	2534078	Spring washer M16 ElZn DIN 127
16	1	24101067	Shaft release spring Ø40x1050
17	4	2489175	Locking nut with flange M16 ElZn DIN 6926
18	1	2112245	Wear steel 12x200x1280 End bend
19	1	24101014	Give away plate of the side wing L1166
20	1	24101065	Torsion spring Ø19 L300 VV
21	1	24101066	Torsion spring Ø19 L300 HV
22	4	2343494	Locking screw M16x55 St 12.9
23	1	24101054	Bolt Ø35x302
24	1	2422344	Hexagon screw M12x20 ElZn 8.8 DIN 933
25	1	2534069	Spring washer M12 ElZn DIN 127

005 Mechanism of side wing 180° FUP450

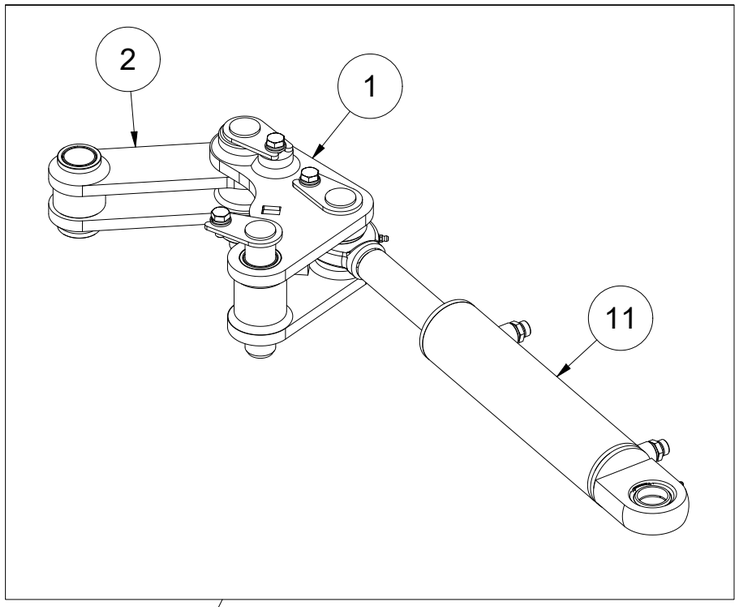

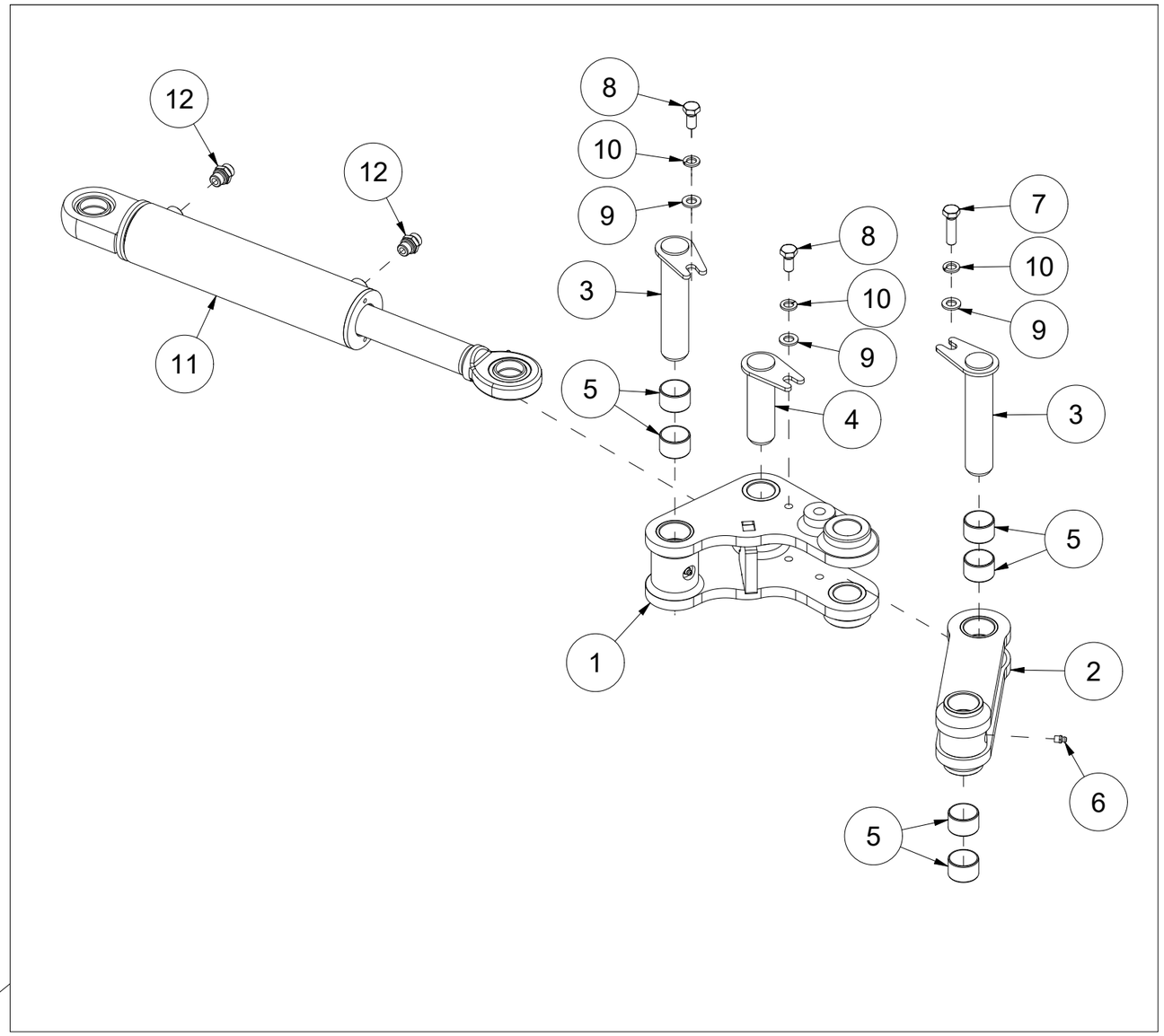

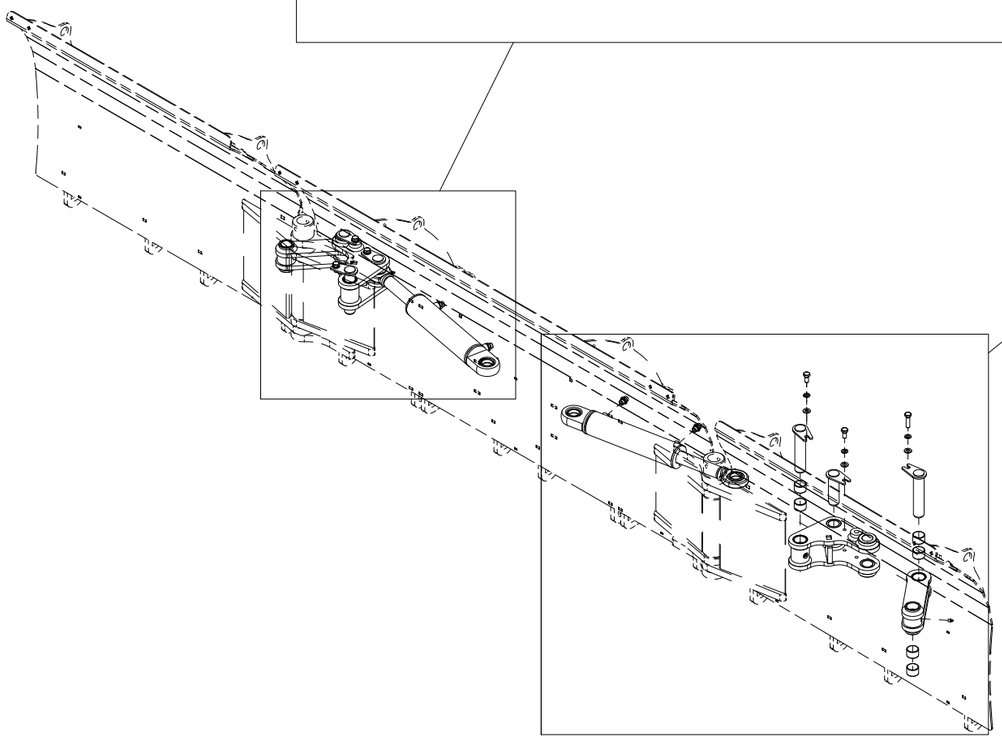

Pos	Qty	Article no	Designation
1	2	24101051	Connection handle
2	2	24101052	Link
3	4	24101053	Bolt Ø35x162
4	2	24101020	Bolt Ø35x112
5	12	2245251	Bushing ZDB P 353925
6	6	2478407	Grease nipple, Straight M8
7	2	2425354	Hexagon screw M12x45 ElZn 8.8 DIN 933
8	4	2422346	Hexagon screw M12x25 ElZn 8.8 DIN 933
9	6	2531069	Washer M12 ElZn DIN 125
10	6	2534069	Spring washer M12 ElZn DIN 127
11	2	2955009	Cylinder 70/40x250 I35I35 L485 RAL9005
12	4	2957749	Hexagon nipple GEK BSP 3/8" L12 ED

007 Lights package FUP450

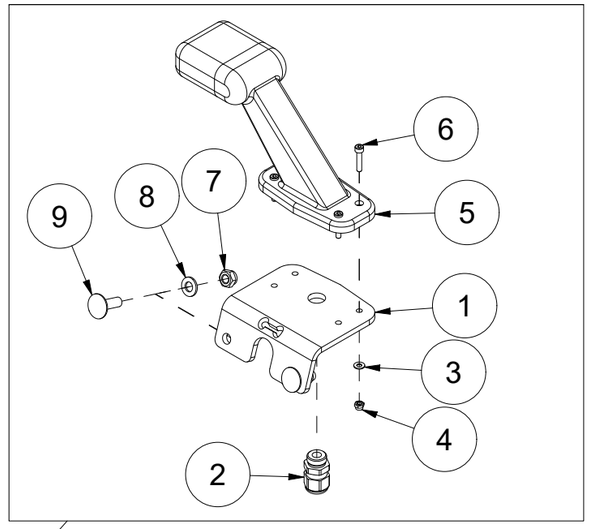

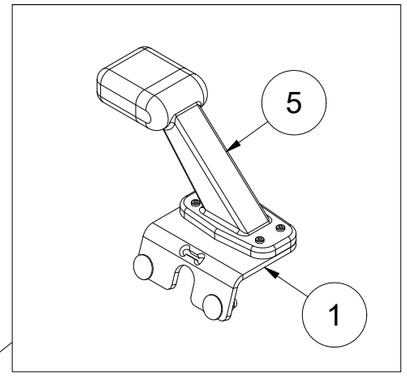

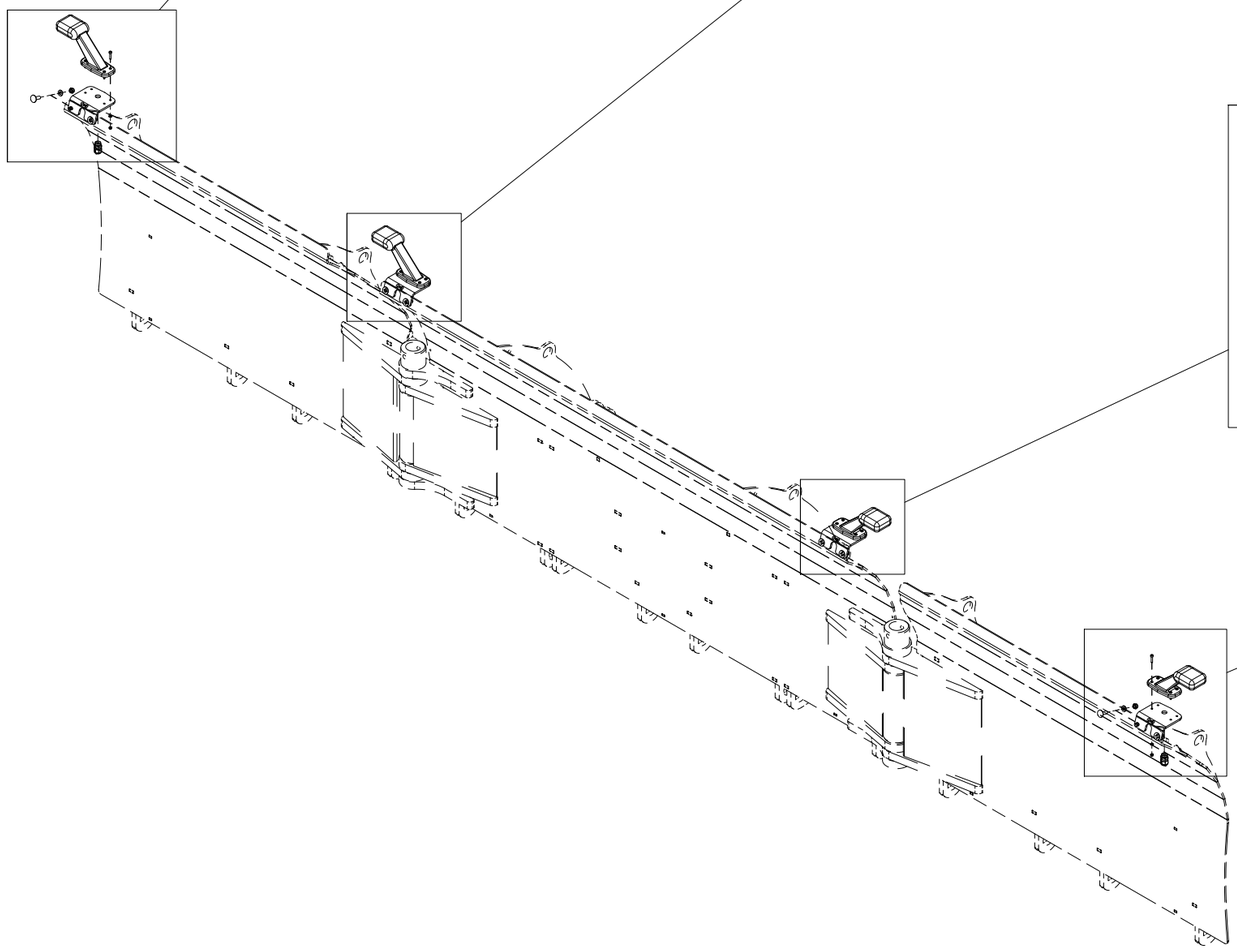

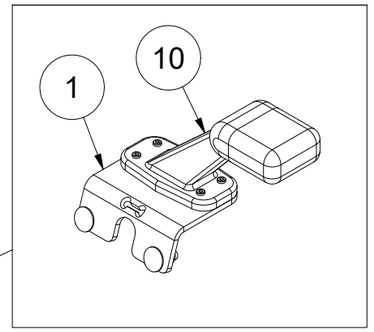

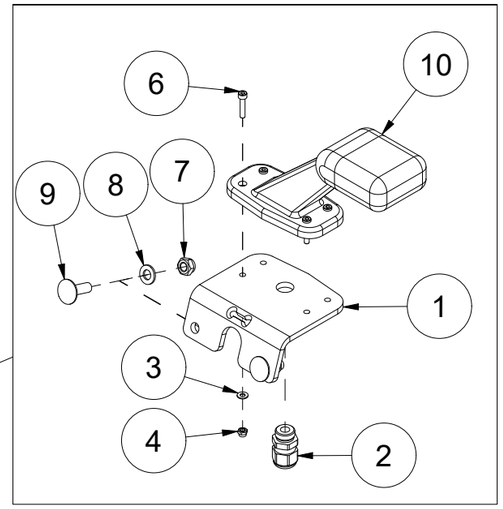

Pos	Qty	Article no	Designation
1	4	24101035	Light bracket
2	4	4127613	Nipple with strain relief M16
3	16	2531023	Washer M4 ElZn DIN 125
4	16	2483606	Locking nut M4 ElZn DIN 985
5	2	4421031	Right horizontal marker light 12V
6	16	2477139	Unbrako cylinder screw M4x20 ElZn DIN 912
7	8	2483609	Locking nut M8 ElZn DIN 985
8	8	2531047	Washer M8 ElZn DIN 125
9	8	2344246	Locking screw M8x25 ElZn 8.8 DIN 603
10	2	4421035	Left horizontal marker light 12V

008 Swivel module FUP450

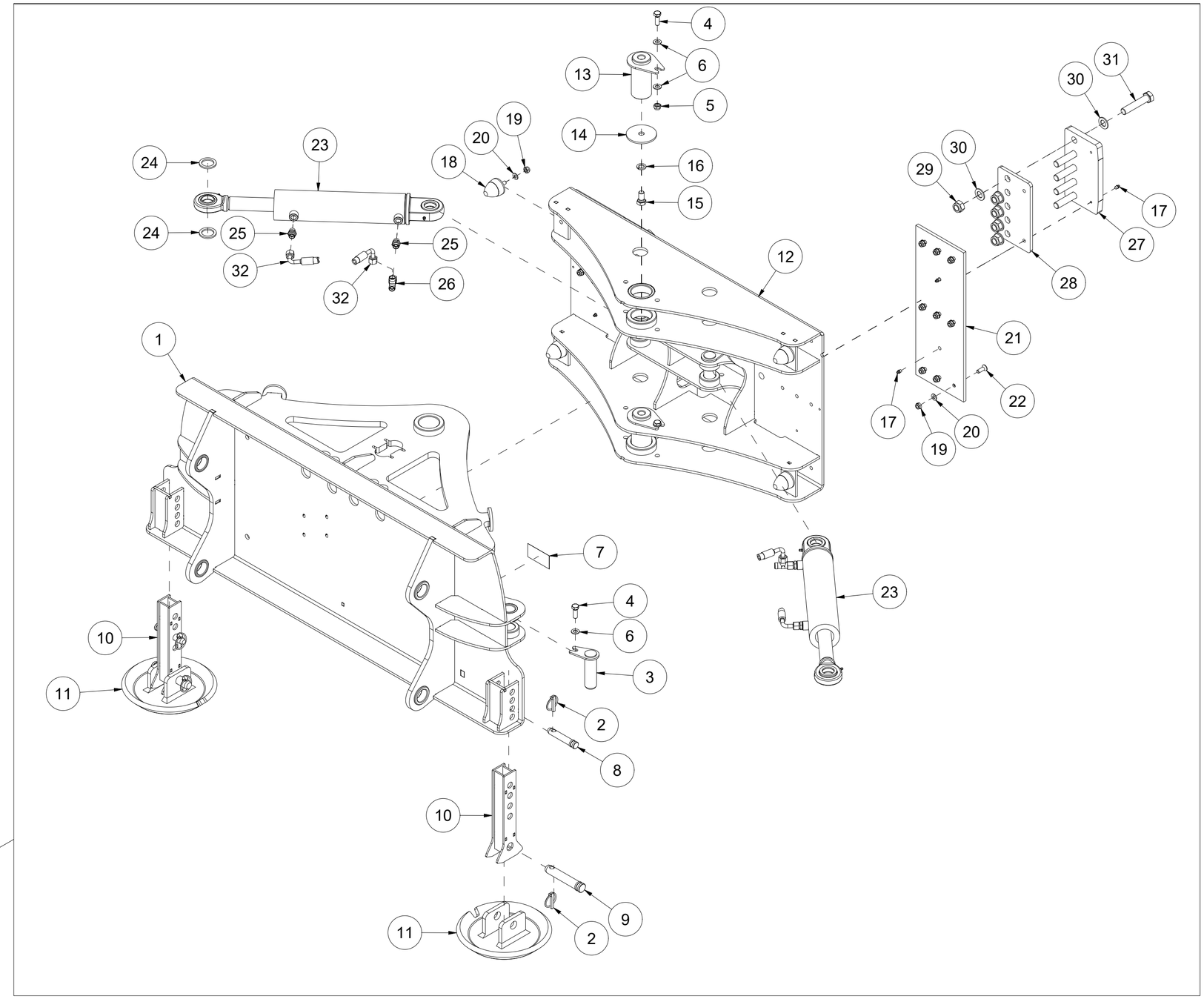

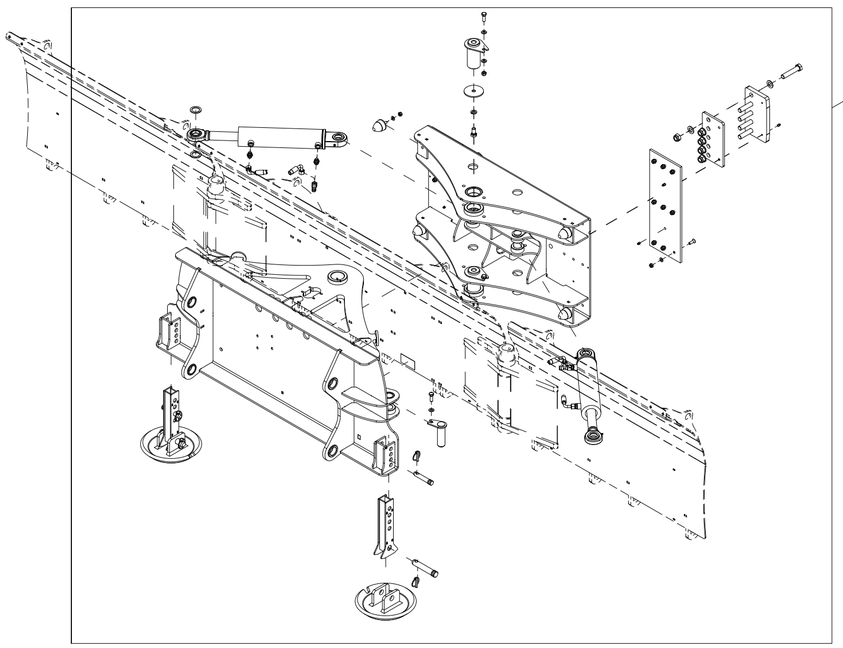

Pos	Qty	Article no	Designation
1	1	24101008	External swing module
2	4	2556142	Linch pin Ø10x40
3	4	24101020	Bolt Ø35x112
4	6	2422350	Hexagon screw M12x35 ElZn 8.8 DIN 933
5	6	2483611	Locking nut M12 ElZn DIN 985
6	12	2531069	Washer M12 ElZn DIN 125
7	2	2935088	Adhesive label 90x48 Hand pinch hazard
8	2	2526321	Top strut bolt cat.1 Ø19x70
9	2	2526326	Top strut bolt cat. 2 Ø25,4x103
10	2	24101075	Bracket
11	2	24101074	Skid pad
12	1	24101009	Inner swing module
13	2	24101056	Bolt Ø60x118
14	2	24101057	Washer Ø17/90x5
15	2	2422485	Hexagon screw M16x30 ElZn 8.8 DIN 933
16	2	2534078	Spring washer M16 ElZn DIN 127
17	8	2478407	Grease nipple, Straight M8
18	4	2225110	Rubber damper 52X58x55Sh
19	22	2483610	Locking nut M10 ElZn DIN 985
20	22	2531060	Washer M10 ElZn DIN 125
21	2	24101049	Sliding rail 200x540x10
22	18	2472299	Unbrako countersunk head screw M10x30 ElZn DIN 7991
23	2	2955008	Cylinder 80x40x250 I35I35
24	8	24101060	Washer Ø36/50,7x4
25	4	2957749	Hexagon nipple GEK BSP 3/8" L12 ED
26	2	2957723	T-hexagon nipple EVLK 12L
27	2	24101040	Fastening plate
28	2	24101048	Sliding rail 135x200x10
29	10	2483615	Locking nut M20 ElZn DIN 985
30	20	2531086	Washer M20 ElZn DIN 125
31	10	2422583	Hexagon screw M20x100 ElZn 8.8 DIN 931
32	2	2958378	Hydraulic hose 3/8" L800

009 Coupling frame FUP450

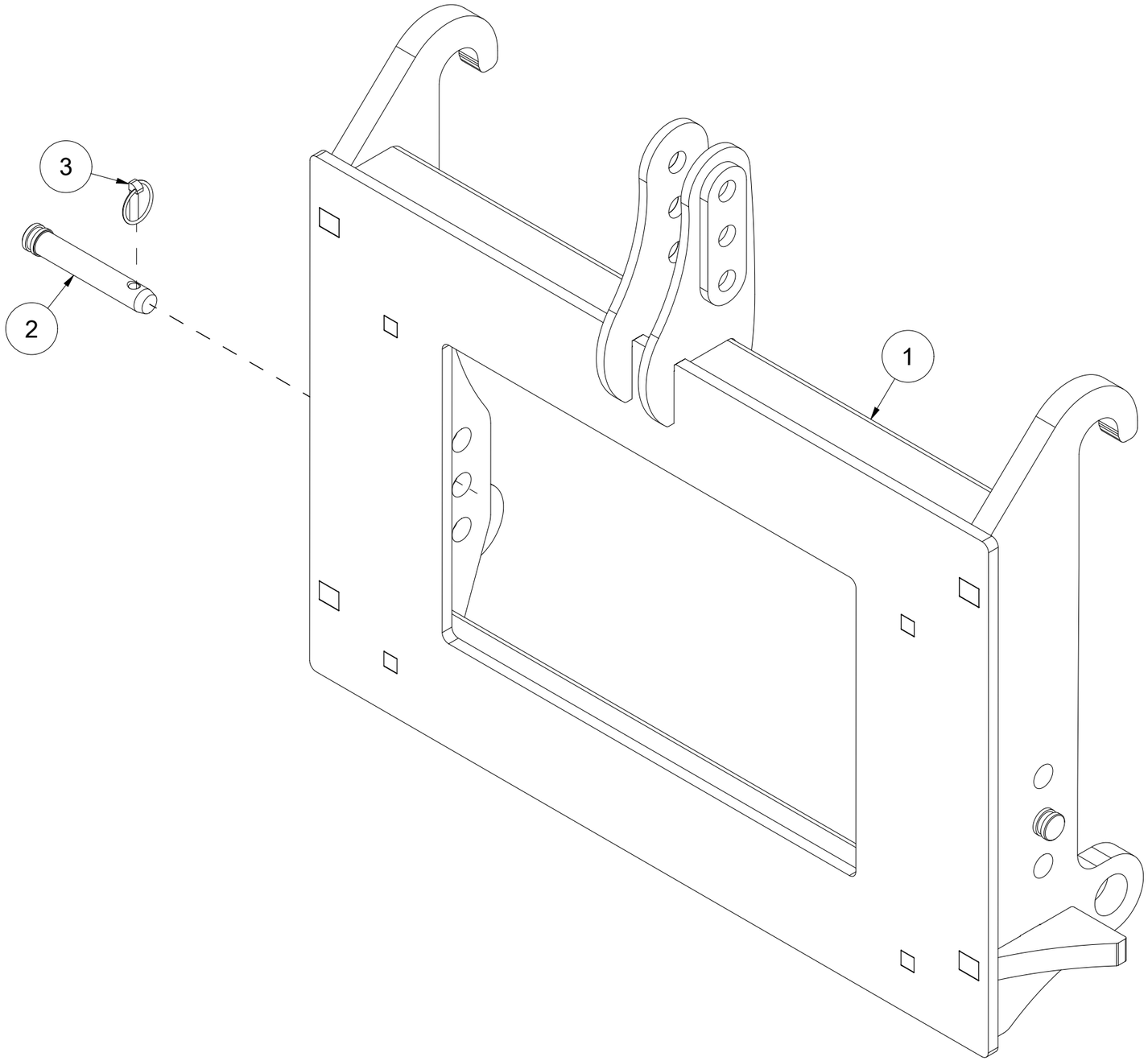

Pos	Qty	Article no	Designation
1	1	24101046	Coupling frame
2	2	2551732	Drawbar bolt cat. 2 Ø28x134
3	2	2556142	Linch pin Ø10x40

010 Accumulators FUP450 v2

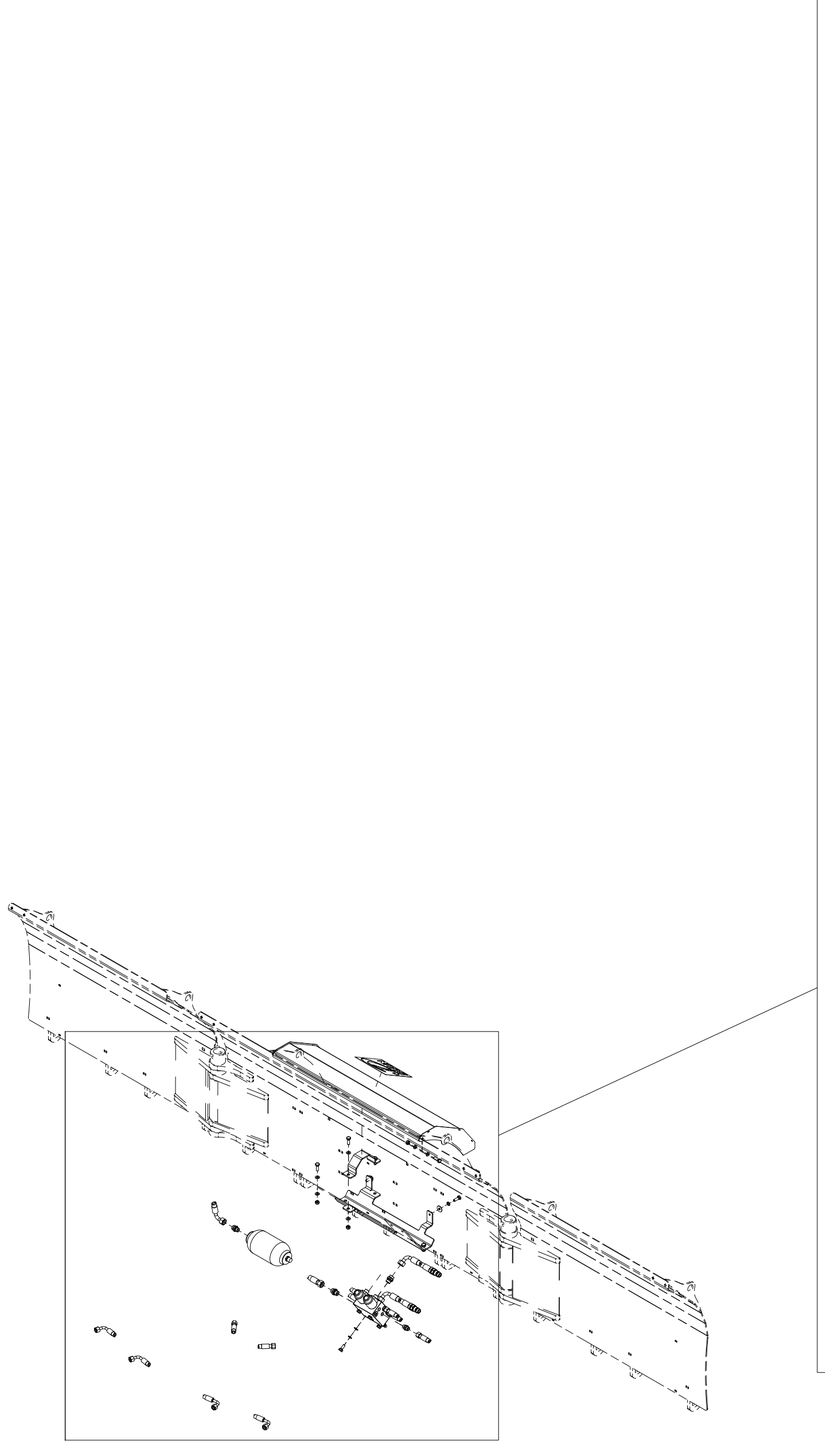

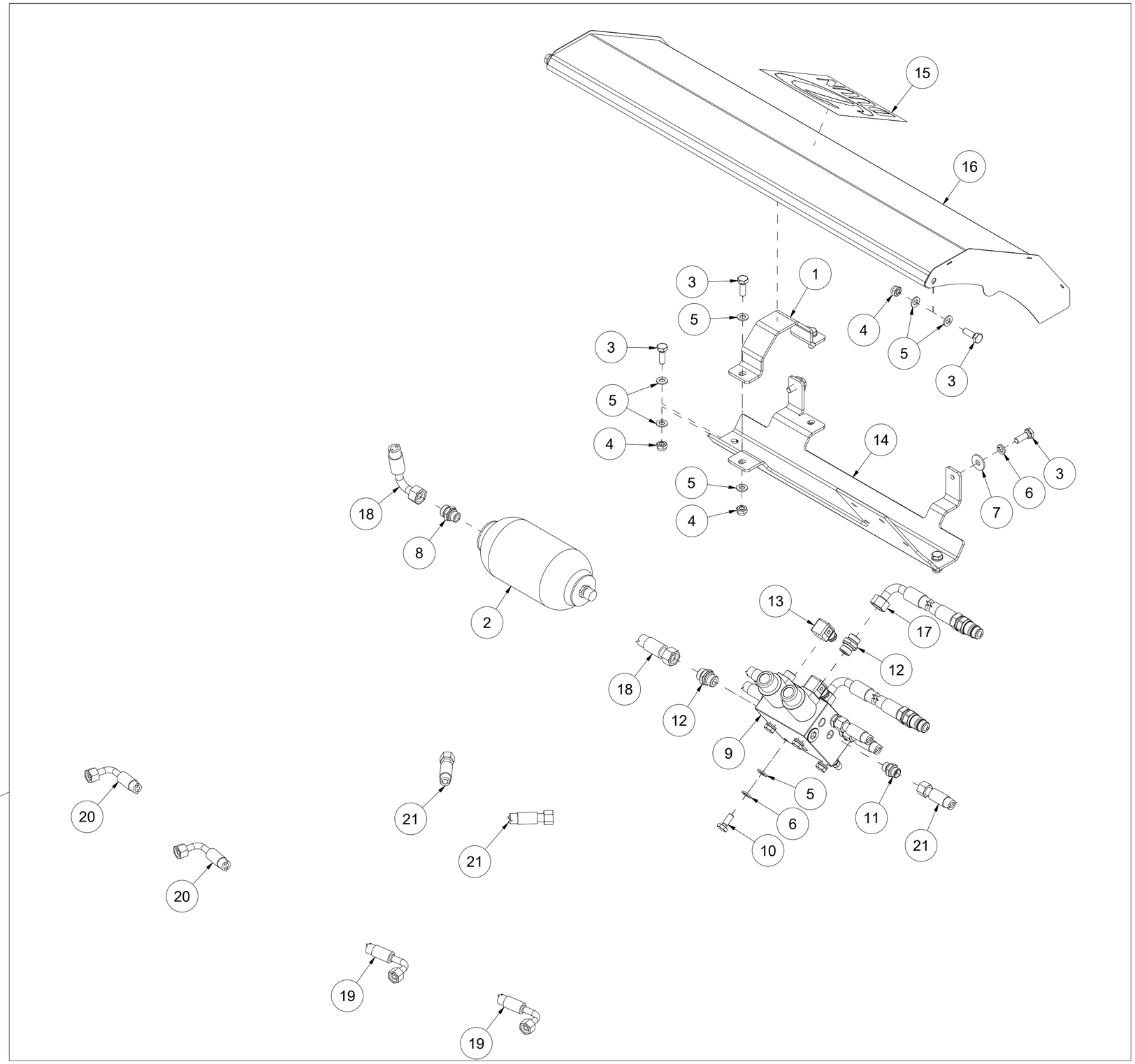

Pos	Qty	Article no	Designation
1	1	24101025	Clamps
2	1	2955310	Accumulator 1,4l TS rotation
3	8	2422299	Hexagon screw M10x30 ElZn 8.8 DIN 933
4	6	2483610	Locking nut M10 ElZn DIN 985
5	16	2531060	Washer M10 ElZn DIN 125
6	6	2534060	Spring washer M10 ElZn DIN 127
7	2	2533060	Body washer M10 ElZn DIN 9021
8	1	2957736	Hexagon nipple GEK M18x1,5 L15 ED
9	1	2955386	Piippo Hydraulic E6338P4
10	4	2422297	Hexagon screw M10x25 ElZn 8.8 DIN 933
11	6	2957749	Hexagon nipple GEK BSP 3/8" L12 ED
12	3	2957768	Hexagon nipple GEK BSP 1/2" L15 ED
13	2	2957402	DIN Plug 12/24VV 5,0m LED
14	1	24101073	Bracket v3
15	1	2935151	Adhesive label Duun 200x200
16	1	24101072	Cover v2
17	2	2958180	Hydraulic hose 1/2" L3250
18	1	2958518	Hydraulic hose 1/2" L560
19	2	2958376	Hydraulic hose 3/8" L670
20	2	2958377	Hydraulic hose 3/8" L900
21	2	2958379	Hydraulic hose 3/8" L1300